Sun tunnels

15°-60°

The VELUX TWF/TLF flexi-tunnels and TWR/TLR rigid tunnels are designed to provide natural light into areas of the house such as corridors, stairwells, bathrooms, cupboards, etc where installation of a VELUX roof window is not possible.

Features

Both systems incorporate a flat glass rooflight with *clear and clean coating and integrated flashing, a 2m flexi or rigid tunnel, and a white trimmed double glazed acrylic ceiling diffuser.

The flexi-tunnel has a 2m long tube which is designed for relatively short distances – up to 3m in combination with the ZTR extension section – between the roof and ceiling. It can be used where installations around obstacles within the roof space is required.

The 2m long rigid tunnel should be specified when greater lengths – again in combination with ZTR extension sections – are necessary and to ensure adequate daylight levels are obtained. It is supplied with 2 x 30° bends.

TWF: flexible tunnel for tiles up to 120mm in profile
TLF: flexible tunnel for slate up to 8mm thick
TWR: rigid tunnel for tiles up to 120mm in profile
TLR: rigid tunnel for slate up to 8mm thick

*Clear and clean coating reduces the frequency of cleaning the rooflight.

Installation

Can be installed in tiled roofs with a maximum profile of 120mm (TWF/TWR) or slated roofs (TLF/TLR). Roof pitch 15°-60°.

Sun tunnels – specification

Rooflight:
Frame/flashing – Black moulded polyurethane
Sash – Black plastic
Pane – 4mm toughened glass with *clear and clean coating

Flexi-tunnel:
14" 2m x 355mm diameter metalized polyester

Rigid tunnel:
14" 2m x 355mm diameter aluminium with highly reflective inner surface
10" 2m x 243mm diameter aluminium with highly reflective inner surface

Ceiling diffuser:
Sealed double glazed acrylic

Ceiling trim:
White plastic

Additional ceiling trim effects for Sun tunnels:
Brushed aluminium effect
Brass effect
Mahogany effect

22009 © 2009 VELUX Group. The utmost care has been taken to provide accurate information. However, VELUX shall not be held responsible for any consequences arising from any errors or omissions in the catalogue nor for any damages or accidental loss resulting from the use of the information herein. VELUX reserves the right to modify, through development improvements, the products displayed in this brochure without notification.Telephone calls may be monitored and recorded for quality control purposes.

Technical data TWF/TWR (Tile)

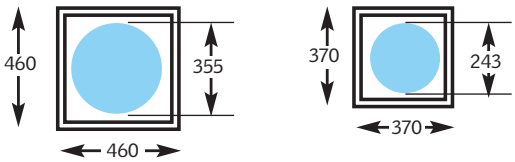

Measurements in mm:

014
14"

010
10"

Cross sections:

Vertical section

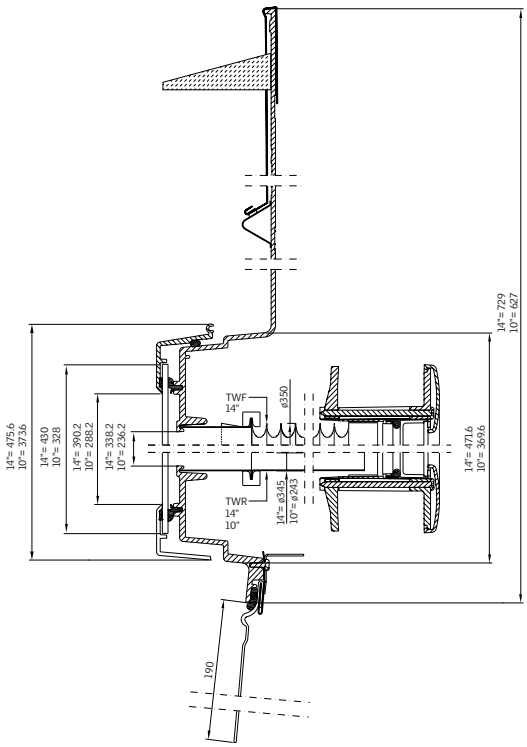

Horizontal section

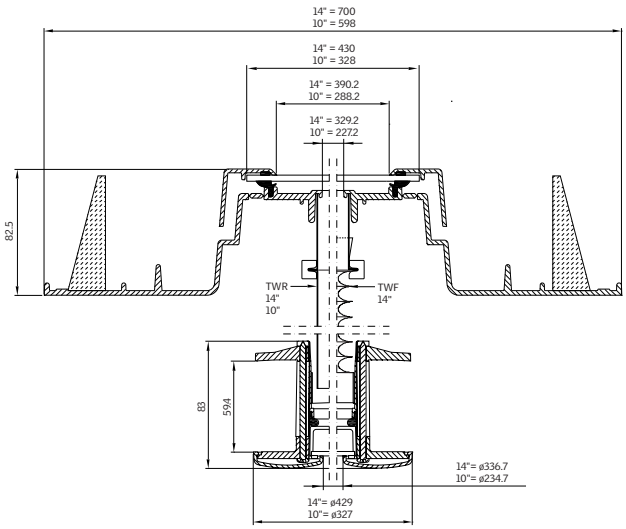

022009 © 2009 VELUX Group

Technical data – TLF/TLR (Slate)

Measurements in mm:

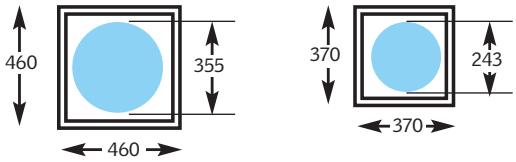

014
14"

010
10"

Cross sections:

Vertical section

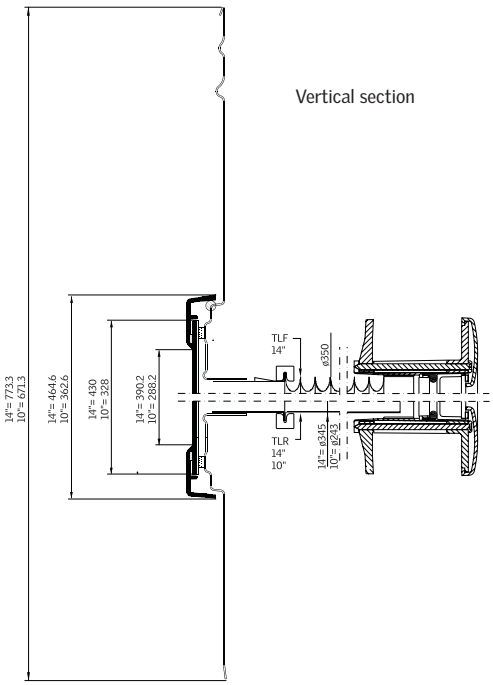

Horizontal section

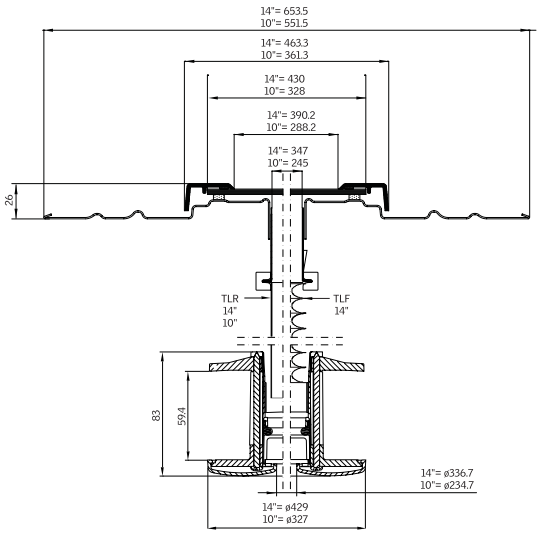

022009 © 2009 VELUX Group